November 2011 Volume 33, Issue 11

The Binnacle

Victoria Model Shipbuilding Society
Victoria BC Canada
vmss.ca

Yahoo! Newsgroup : VIRCB
Vancouver Island Radio Control Boaters

B.A.M.M.

Page 7, BAMMNews, August 2011

My recent build, a rail-float complete with 'O' gauge rail cars.

Page 4, BAMM News Update, November 2011

Rescue

Always a good turnout

B.A.M.M.

Victoria Model Shipbuilding Society

General Meeting – October 13, 2011

Call to order: 7:30 pm (27 members & guests in attendance)

1. Welcome: New member **Glen Newmeyer** and he brought along guest **Bryon Calverley** with him. **Ron Armstrong** had young lad named **Dave** as his guest.

Outreach: **Ernest Reid** is in hospital after a fall injuring his hip & ribs.

Club Finances: Treasurer **Mike Creasy** absent, no report given. **Barry Fox** did let members know that **Mike Creasy** would probably have the tickets to our Christmas Social / Awards Banquet for sale at the November Meeting.

Upcoming Events: There will be sailing on October 22nd at the Royal Victoria Yacht Club. The Club Sailing Championship will take place on October 30th, November 15th & 27th. It will be a best 2 out or 3. On November 6th at Beaver Lake, the Powell & Denton Cups will up for grabs. Our AGM is on November 10th and there are several vacancies on the Executive to fill.

Open Forum: Nothing discussed.

Show & Tell: **Ron Armstrong** had the Columbia, and **Dave Denton** a 12"tug.

Adjourn business portion & break

After the break, the Swap & Shop took place.

Respectfully Submitted
Scott Munford, Secretary

Executive Committee

President: Barry Fox	**294-0350**
Vice-Pres: Rob Ross	***598-4619***
Secretary: Scott Munford	***382-1673***
Treasurer: Mike Creasy	***888-4860***
Show Coordinator: B.Andrews	***479-2761***
Binnacle Editor: Bill Sturrock	***479-0239***
Quartermaster: Bob Rainsford	***383-2256***
CRD Liaison: Dave Denton	***592-6866***
Parks Liaison: Mike Claxton	***479-6367***
Sailing Director: David Cook	***388-5994***
Librarian: Dave Denton (Plans)	***478-1800***
Librarian: Don Meyer (Books)	***381-3356***
Publicity: Ron Armstrong	***385-9552***
Director@Large: Dave Denton	***592-6866***

All above (250) area code

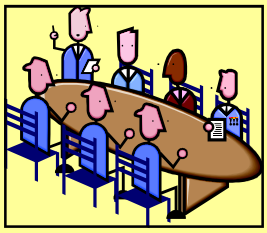

[Your Executive meets the last Thursday of every month!]

The Victoria Model Shipbuilding Society is a non-profit club, open to all, established in 1978 under the Societies Act of B.C.

Mailing address:
106-4480 West Saanich Road
Box 55
Victoria, BC V8Z 3E9

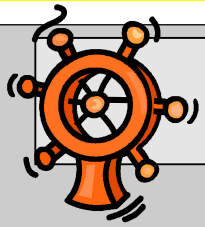

The Prez Says...

Prez Says

November already and another year almost in the books. Lots of good activity this year with a number of new boats (hopefully we will see all of them at the next meeting to be judged for best new boats of the year), sailing at some new places and even some new events for members to participate in.

All good.

Hopefully next year will see us expanding on our activities a bit and get some more of you involved and using your boats a bit more as well.

One of our neighbouring clubs, BAMM (Burnaby Association of Marine Modelers), has asked if we would like to get involved in a home and home type of event. OK, they aren't quite next door neighbours but they are a pretty active group and their activity and membership mirror much of ours.

We haven't ironed out any details yet as to what these days would look like but they would likely be combined sail and power things with some sort of competition piece to them as well as a display of each other's modeling expertise. You Exec haven't ironed out the timing yet but BAMM is heading for a date in the late spring so maybe we should look at something in the early fall? Maybe a Harrison Pond deal or maybe a thing for us to ask Western Speedway if we could use their terrific pond and maybe get some public out to watch. All just at the idea stage now but a great idea.

About the time you are reading this, we will be conducting the Annual General Meeting. We have somewhere around 50 members in this club. We are looking for 2 or 3 people who don't already have their name on the masthead of this publication to get involved and take on some of the operation of the club. You will member that I have asked for volunteers in many of the last Binnacles as well as asking for people to come forward at just about every regular meeting for the last number of months. A few of the available positions are among those that we are required to fill by the terms of governance of the Societies Act. If they aren't filled then we are at risk of affecting our existence. So step up and volunteer. You don't have to stand up in front of the crowd, simply talk to someone who is on the current Exec and let them know.

The Annual Xmas Party and Awards Night is just about upon us. Tickets are now available. It is a very nice night out and lots of chances to visit with your fellow modelers. You might not recognize some of them dressed up but they are still the great folks you have come to enjoy.

One more President's Report to go!!!

-Barry

ON THE RADAR

INFORMATION ON UPCOMING EVENTS

Nov. 10th: AGM and Elections
Dec. 8th: Christmas Social
Dec. 17th: Lighted Boats (HMYP) 5 PM

Meetings: Second Thursday 7:30-9:30
4050 Carey Road
Next is: December 8: Social Evening,

SAILING: 1st and 3rd Sundays 1 – 3 PM
Beaver Lake
Next is: November 20th

POWER: Sundays 10 – 12
Harrison Model Yacht Pond (HMYP)
Dallas Road at Government Street

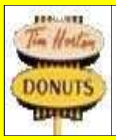

LANGFORD LAKE NAVY
Wednesdays 9:30 AM
Langford Lake, Leigh Rd at Trillium

For November 2011 Binnacle

THE SUB SUBJECT

Magnets in Models: Part II

The use/application of magnets in models can take on numerous configurations. All boil down to alternatives for mechanical on-off switches. It's that simple.

The difficulties set in devising ways of application--usually in servo operated linkages. The difficulty there, for model submarines, lies in the need to keep the servo dry. That requirement, as will be illustrated, calls for circuitous design that could strike readers as mild iterations of Rube Goldberg-inspired labyrinths. But it's not really all that bad because the basic attempt is to keep it as simple and puposeful as possible. Most often, the end results are worth the trouble and, given success, quite satisfying to the designer modeler.

In this month's column wet (submerged) release of torpedos will be covered--as configured in at least three of the DKM's midget subs, i.e. the Bieber, (1 torp; one "driver,") the Molch (1 torp; one "driver,") and the Seehund (2 torpedos and a 2-man "crew.")

All three of those designs carried G7E torps externally and, as far as could be learned, they were released mechanically, by one or two levers in the cockpit--sort of like a truck's handbrake. It is not clear how, upon release, the torpedos' motor was started, but magnetically could be a good guess. (Meanwhile, instances were reported where the torp started but did not fully release. That explains why the crews were issued with compact Bibles.)

As may be gathered from the illustrations to follow this reaction could result: "I asked for the time of day and was told how the watch was made." Must live with that.

Note that the internal magnets are part of a reed swith.

. . ./2

Romain L. Klaasen

The Sub Subject (Nov., '11)

FIG. 2 TOP VIEW OF STBD. SIDE (Ref. Details "A" & "B")

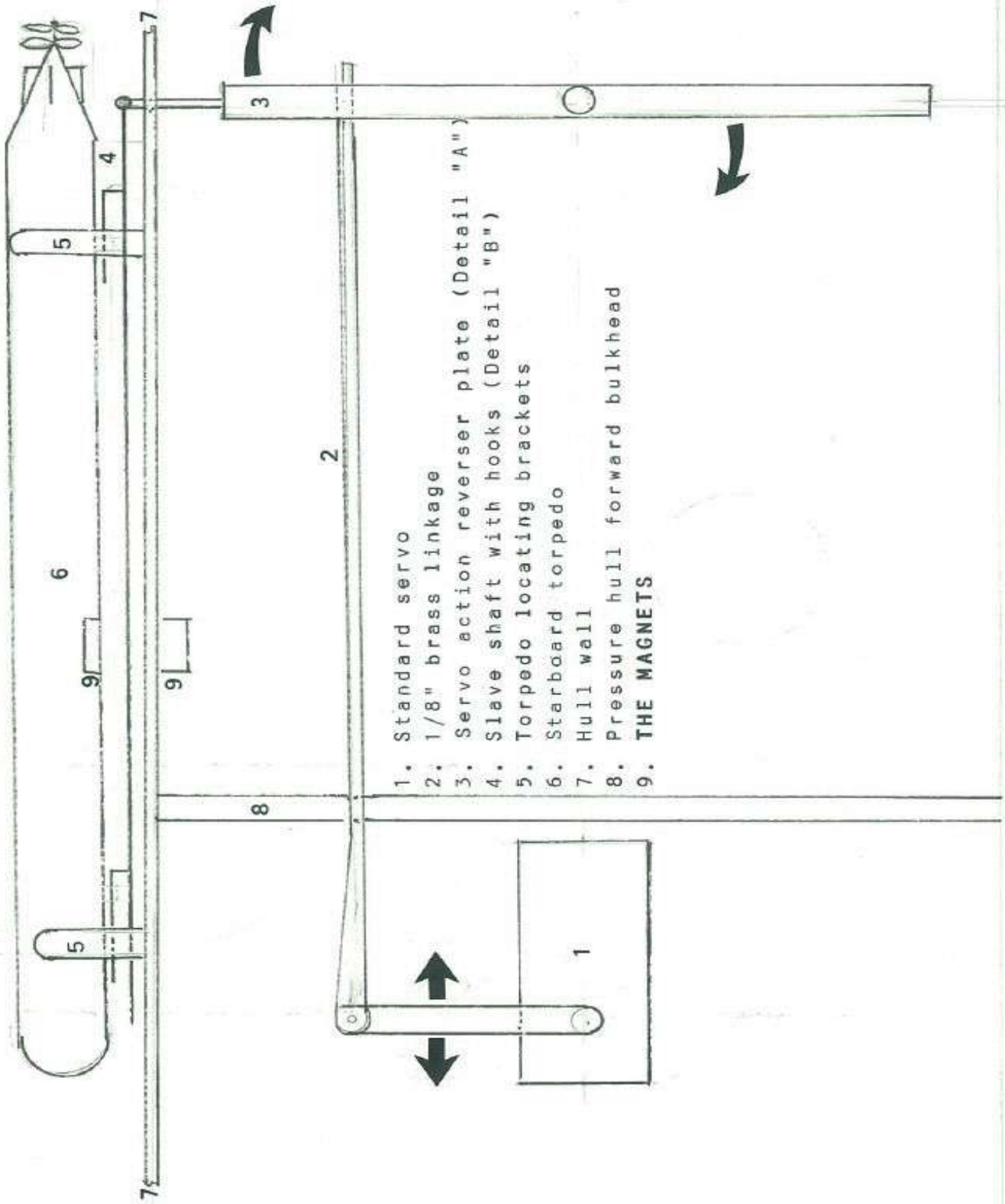

The Sub Subject (Nov.,'11)

DETAIL "A" OF FIG. 2 (For Fig "1" see Oct.)

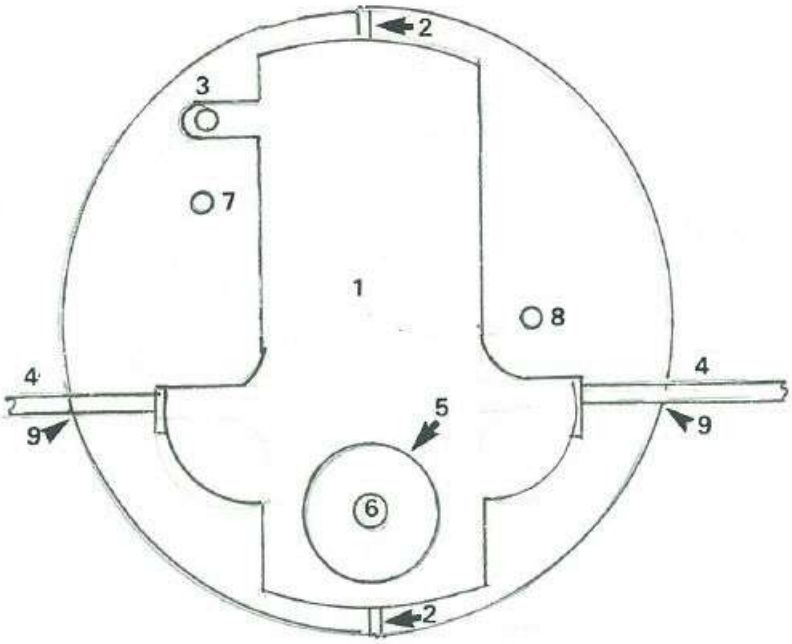

LOOKING FORWARD

1. Servo action (push/pull) reverser plate (3/8" G.E. Lexan)
2. Fulcrum shafts (1/8" brass)
3. 1/8" linkage to servo
4. 1/8" brass torp releases, limked to "5" in "B" move through slots in hull wall
5. Driveshaft passage sized to avoid interference with reverser plate action
6. 3/16" driveshaft
7. 1/8" linkage to stern planes
8. 1/16" rudder linkage, lowered from servo level at "3"
9. Slotted hull wall

Editor's Note: We have reproduced this contribution by Romain, as close to its original handcrafted form as possible. Not only has he done this fine workmanship for over 15 years as regular as clockwork, he has not had any access to a computer. He has manually typed every issue on his faithful typewriter and prepared all the drawings by hand with pencil and ruler. Hats off to you Romanus Unicum for your craftsmanship and devotion to VMSS.

The Sub Subject (Nov.,'11)

DETAIL "B" OF FIG. 2 (For Fig "1" see Oct.)

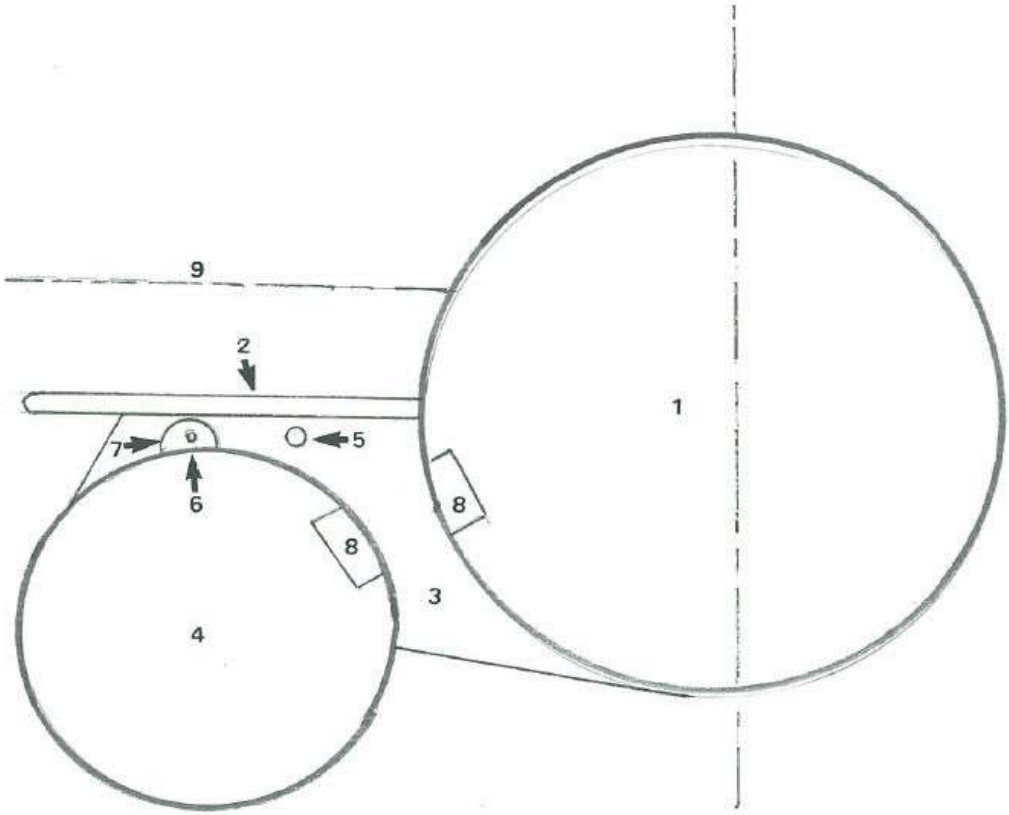

1. Hull (PVC tube)
2. Stabilizer & torpedo carrier
3. Torpedo bracket (¼" Lexan or Sintra)
4. Torpedo (± 15" l.o.a.)
5. 1/8" slave shaft (has two 1/16" torp hooks)
6. 1/16" torpedo hook (runs parallel to "5")
7. Torpedo suspender (Lexan; streamlined)
8. **THE MAGNETS** (need a third one while attaching
9. Waterline (barely affected by torps on or off)

Romain L. Klaasen

Not shown in the illustrations are the soft coil springs attached to the hull about mid-way between the front Torpedo Locating Brackets and the Magnet(s). Those springs, upon withdrawal of the 1/16" torpedo hooks push the torpedo away so that fins& the screws will not get tangled up by the releasing boat. Also, resulting from experiments, it was concluded that the FRONT torpedo hooks had to be slightly shorter than the back ones. That way, combined with coil spring's action, the released torp took a slight dive, which was then offset by its buoyancy. The aim was to have the running torpedo visible from the point of release to the end of the run. (Warheads painted fluorescent red were a help as well.)

Why magnets?

Because: .mechanical switches proved to be vulnerable

- magnets are easy to install, and relatively insensitive to precise location and aligment;
- Magnets last for close to ever;
- Magnets do not require hull penetrations, and the concommitant leakage/seepage curse

The magnets used in Molch and Seehund were bought at Price's Alarm Systems. There are two different types: (1) permanently OPEN and (2) permanently CLOSED. Both involve two separate pieces in plastic housings. One contains a magnet and the other a reed switch. The permanently OPEN type was needed for the models. The circuit closes once the switch (upon torp release) gets outside of the on-board part's magnetic field. (The common commercial application is for retail store doors. A bell, buzzer or what have is activated when the door-mounted magnet is moved away.)

End of story.

Next month, to put "paid" to 2011, the possibilities of dry launches will be explored. So far. at HMYP, nothing has been built yet. Rob Ross's snellboot could make for

. . . /6

an excellent test bed. She has both tubes and size.

Springs? Elastics? Gas? All will be considered to greater or lesser degrees in December's Part III.

Till then, magnetic greetings.

Romanus Unicum

* * *

(Victoria, October 12, 2011)

Romain L. Klaasen

Prop Speed

It's that time again, the subject I have put some thought to is prop speed. I found an article in Scale Ship Modeler that seemingly had all the answers. It gives the method for finding out the motor speed, and a graph to give prop diameter and desired R.P.M. I was going to print this all out, but **Mark Giles** pointed out to me that all of this doesn't mean didley squat unless you know the pitch of your prop ..... All of this gets a little frustrating, so my quick answer is to put a 3 to 1 reduction behind the motor and let it go at that; the motor will spin more freely and consume less amps, with the motor running up faster you will get more horsepower, and probably lose no speed; I can hear the " it's just not that simple "coming from all sides right now, **Jim Briante** did a whole lot of measurements and got his E boat running on something a little bigger than a watch battery.

Motor speed

To find your motor speed you chuck up your motor in a drill press ,and connect the voltage leads across the wires . Spin the drill press and the volts will read maybe 1.2 volts . check the speed of the drill press with a tachometer and get the rpm. Divide the rpm by the volts and multiply that by the volts of the battery you will be using. This will give you the free running speed of your motor. Use a gearbox to bring the shaft speed down to something that the prop would enjoy. Then we get into this whole pitch thing ,add another dimension of confusion .

Caveat Emptor

This article says to get the rpm of the drill chuck with a tachometer. Why not use the tach to get the motor speed in the first place? Below you will find the graph of desirable prop speed, but it don't mean much if you don't know the pitch of your prop . Jim got really good results by recording the amperage draw of his motors under different conditions.

Congratulations to **Graham Smith** for winning the **Denton Cup** on Sunday. Second place went to his son **Miller**, Third place to **Pascal Smyth.** The weather was clear and cold .., real cold, a good time was had by all.

Dave

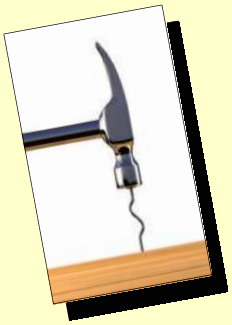

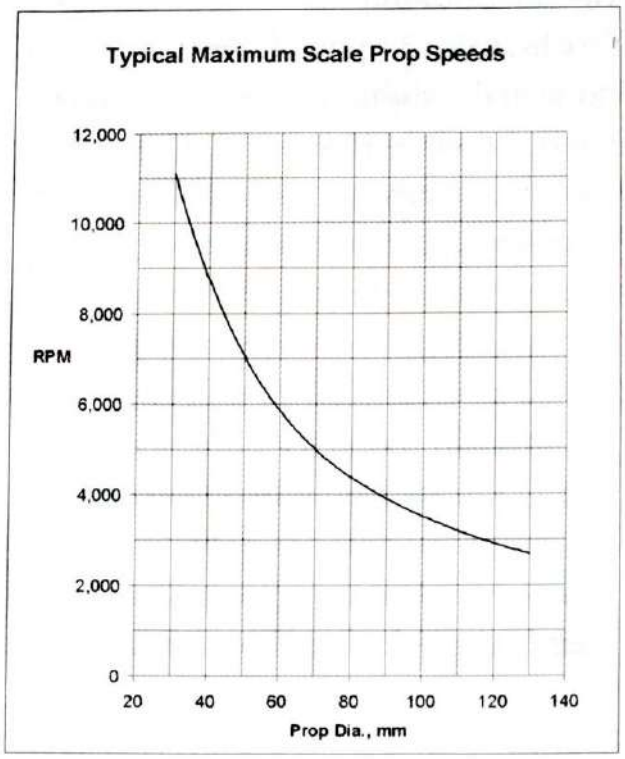

FIGURE 1 MAXIMUM PROP SPEEDS BY DIAMETER.

SOURCE- RABOESCH.

Ships in Scale • March/April 2006 65

The Coastal Tugboat "Aly A"


Photo by Jack Plummer

The coastal tugboat "Aly A" is a scratch built freelance model designed after large east coast tugboats from the early part of the last century. She represents a typical coastal tugboat of 128 ft or 48in at 3/8 to the foot scale. With battery installed she weighs in at 37lbs and is powered by a 12-volt motor with a 2:1 belt drive reduction. These tugs ranged from 120 to 160 ft and between 800 and 1000 hp, which doesn't seem like a lot by today's standards, but these were powerful tugs for their time. Unlike harbour tugs, they had to spend relatively long periods at sea. They required accommodations for crew, extra fuel storage and condensing steam engines. These tugs usually pulled three or more barges loaded with coal, lumber, cotton and other goods up and down the east coast. They played a big part in the U.S. Economy.

I enjoyed building this my first marine model and have plans to build another, a touch shorter, but the same construction. Perhaps there will be a barge in the works, Something for the "Aly A" to tow around the pond.

Al Adams

RESULTS OF THE DENTON CUP, NOVEMBER 6/11

Good turnout by the power guys and also very good conditions for all skippers.

1st place	**Graham Smith**	93 points
2 nd place	**Miller Smith**	81 points
3 rd. lace	**Pascal**	71 points
4th place	**Ron Armstrong**	55 points
5th place	**Bill Andrews**	50 points
6th place	**Dave Denton**	47 points
7th place	**Kevin**	44 points
8th place	**Dave Taylor**	40 points

Scott Munford had his boat there with wife **Cathy** at the helm. Unfortunately mechanical problems forced an early retirement from the event.

POWELL CUP RESULTS.

Very poor turnout by the sailors on this event, only three yachts.

1st place	**Dave Taylor**	60 points
2nd	**Barry Fox**	57 points
3rd.	**Graham Smith**	31 points

Thanks to all the harbour masters that helped the events run well with no apparent problems.

Ken Lockley

JUST A REMINDER THAT THE CUT-OFF FOR PURCHASING TICKETS TO OUR CHRISTMAS SOCIAL, SCHEDULED FOR THURSDAY, DECEMBER 8TH AT THE GORGE VALE GOLF CLUB, IS NOVEMBER 11TH. TICKET PRICES ARE $27.50 FOR A SINGLE OR $50 A PAIR. PLEASE SEE MIKE CREASY, AT OUR AGM FOR TICKETS.

IF ANYONE WOULD LIKE TO ATTEND BUT YOU DO NOT HAVE TRANSPORTATION, SEVERAL MEMBERS HAVE VOLUNTEERED TO PICK-UP AND RETURN MEMBERS WHO NEED A DRIVE.
PLEASE CONTACT ANYONE ON THE EXECUTIVE AND THEY WILL PASS ALONG YOUR NAME.

Hi Bill, **Ken Lockley's** schooner is up for auction with 50% going to the club. Ken would like the bidding to start at $300. and a closing date at the end of the Westshore Mall Hobby show in February 2012. Norm Farley's sail boat is also back on the auction block and the bidding for it will start at $100. with a closing date of Jan.12/2012.

Contact: Bill Andrews, (250) 479-2761

Built by Norm Farley...now up for auction.

Contact: Bill Andrews.

DUES 'R DUE!

RSVP

(Regular Sailors Volunteer Payment)

Victoria Model Shipbuilding Society
Financial Position
As of September 30, 2011

	Sep 30, 2011
CASH ASSETS	
Cash & Accounts	
High-interest Savings	1,243.60
Petty Cash	159.48
Term Deposit - GIC	7,631.25
VMSS Chequing	618.89
Total Cash & Accounts	9,653.22
TOTAL CASH ASSETS	9,653.22

I certify this to be an accurate representation of the Victoria Model Shipbuilding Society's financial position on September 30, 2011.

M. Creasy, Treasurer

This unaudited report was reviewed and accepted by the Executive Committee of the Victoria Model Shipbuilding Society, October 27, 2011.

B. Fox, President

MYSTERY PAGE

Mystery ship in Friday Harbor. Any ideas who she is?